MIAMI-DADE COUNTY
PRODUCT CONTROL SECTION
11805 SW 26 Street, Room 208
Miami, Florida 33175-2474
T (786) 315-2590 F (786) 315-2599
www.miamidade.gov/building

DEPARTMENT OF REGULATORY AND ECONOMIC RESOURCES (RER)
BOARD AND CODE ADMINISTRATION DIVISION

NOTICE OF ACCEPTANCE (NOA)

Nailor Industries Inc.
4714 Winfield Road
Houston, TX 77039

SCOPE: This NOA is being issued under the applicable rules and regulations governing the use of construction materials. The documentation submitted has been reviewed and accepted by Miami-Dade County RER-Product Control Section to be used in Miami Dade County and other areas where allowed by the Authority Having Jurisdiction (AHJ).

This NOA shall not be valid after the expiration date stated below. The Miami-Dade County Product Control Section (In Miami Dade County) and/or the AHJ (in areas other than Miami Dade County) reserve the right to have this product or material tested for quality assurance purposes. If this product or material fails to perform in the accepted manner, the manufacturer will incur the expense of such testing and the AHJ may immediately revoke, modify, or suspend the use of such product or material within their jurisdiction. RER reserves the right to revoke this acceptance if it is determined by Miami-Dade County Product Control Section that this product or material fails to meet the requirements of the applicable building code.

This product is approved as described herein and has been designed to comply with the Florida Building Code, including the High Velocity Hurricane Zone.

DESCRIPTION: Model 1675WDVM Aluminum Louver – L.M.I.

APPROVAL DOCUMENT: Drawing No. **1675WDVM**, titled "1675WDVM Louver", sheets 1 through 12 of 12, prepared by manufacturer, dated 09/25/2017, with revision C dated 05/10/2024, signed and sealed by Wayne K. Helmila, P.E., bearing the Miami-Dade County Product Control Revision stamp with the Notice of Acceptance number and expiration date by the Miami-Dade County Product Control Section.

MISSILE IMPACT RATING: Large and Small Missile Impact Resistant

LABELING: Each unit shall bear a permanent label with the manufacturer's name or logo, Houston, TX, model/series, and following statement: "Miami-Dade County Product Control Approved", unless otherwise noted herein.

LIMITATION: This system is to be installed in a location where the room behind the louver is designed to drain water penetrating into the room, and the room will house water resistant/waterproof equipment, components, or supplies.

RENEWAL of this NOA shall be considered after a renewal application has been filed and there has been no change in the applicable building code negatively affecting the performance of this product.

TERMINATION of this NOA will occur after the expiration date or if there has been a revision or change in the materials, use, and/or manufacture of the product or process. Misuse of this NOA as an endorsement of any product, for sales, advertising or any other purposes shall automatically terminate this NOA. Failure to comply with any section of this NOA shall be cause for termination and removal of NOA.

ADVERTISEMENT: The NOA number preceded by the words Miami-Dade County, Florida, and followed by the expiration date may be displayed in advertising literature. If any portion of the NOA is displayed, then it shall be done in its entirety.

INSPECTION: A copy of this entire NOA shall be provided to the user by the manufacturer or its distributors and shall be available for inspection at the job site at the request of the Building Official.

This NOA **revises NOA No. 23-0724.22** and consists of this page 1 and evidence pages E-1 and E-2, as well as approval document mentioned above.

The submitted documentation was reviewed by **Carlos M. Utrera, P.E.**

MIAMI-DADE COUNTY APPROVED

07/08/24

NOA No. 24-0516.03
Expiration Date: August 30, 2028
Approval Date: July 18, 2024

Nailor Industries Inc.

NOTICE OF ACCEPTANCE: EVIDENCE SUBMITTED

1. EVIDENCE SUBMITTED UNDER PREVIOUS NOA # 18-0117.11

A. DRAWINGS

1. Drawing No. **1675WDVM**, titled "1675WDVM Louver", sheets 1 through 11 of 11, dated 09/25/17, prepared by the manufacturer, signed and sealed by Wayne K. Helmila, P.E.

B. TESTS *"Submitted under NOA No. 18-0117.11"*

1. Test reports on: 1) Uniform Static Air Pressure Test, Loading per FBC, TAS 202-94
2) Large Missile Impact Test per FBC, TAS 201-94
3) Cyclic Wind Pressure Loading per FBC, TAS 203-94
along with installation diagram of Model 1675 WDVM Louver System, prepared by Intertek, Test Report No. **H4890.01-801-18-R3**, dated 09/27/17 and revised on 05/18/18, signed and sealed by Tyler Westerling, P.E.

2. Test Report on Wind Driven Rain Resistance per TAS 100(A)-95 on a Model 1675WDVM Vertical Aluminum Louver, prepared by Intertek, Test Report No. **H0051.02-801-18 R1,** dated 09/28/17, revised on 11/21/17, signed and sealed by Tyler Westerling, P.E

3. Test Report on High Velocity Wind Driven Rain Resistance per AMCA 550-15 on a Model 1675WDVM Vertical Aluminum Louver, prepared by Intertek/ATI, Test Report No. **H0051.01-801-18-R3,** dated 04/20/2017, revised on 11/21/2017, signed and sealed by Tyler Westerling, P.E.

C. CALCULATIONS

1. Louver structural calculations dated 10/26/17, prepared by Rice Engineering, signed and sealed by Wayne K. Helmila, P.E.

D. QUALITY ASSURANCE

1. Miami-Dade Department of Regulatory and Economic Resources (RER)

E. MATERIAL CERTIFICATIONS

1. None.

F. STATEMENTS

1. Statement letter of code conformance to the **FBC 6th Edition (2017)** issued by Rice Engineering, dated 04/16/18, signed and sealed by Wayne K. Helmila, P.E.

2. Statement letter of no financial interest issued by Rice Engineering, dated 04/16/18, signed and sealed by Wayne K. Helmila, P.E.

Carlos M. Utrera, P.E.
Product Control Examiner
NOA No. 24-0516.03
Expiration Date: August 30, 2028
Approval Date: July 18, 2024

NOTICE OF ACCEPTANCE: EVIDENCE SUBMITTED

2. EVIDENCE SUBMITTED UNDER NOA # 21-0630.09 AND NEW

A. DRAWINGS

1. Drawing No. **1675WDVM**, titled "1675WDVM Louver", sheets 1 through 12 of 12, prepared by manufacturer, dated 09/25/2017, with revision C dated 05/10/2024, signed and sealed by Wayne K. Helmila, P.E.

B. TESTS

1. None.

C. CALCULATIONS

1. Louver calculations, prepared by Rice Engineering, dated 05/10/2024, signed and sealed by Wayne K. Helmila, P.E.

D. QUALITY ASSURANCE

1. Miami-Dade Department of Regulatory and Economic Resources (RER).

E. MATERIAL CERTIFICATIONS

1. None.

F. STATEMENTS

1. Statement letter of code conformance to the 8th edition (2023) of the FBC, issued by Rice Engineering, dated 05/10/2024, signed and sealed by Wayne K. Helmila, P.E.

"Submitted under NOA # 21-0630.09"

2. Statement letter of code conformance to the **7th edition (2020) FBC**, issued by Rice Engineering, dated 08/16/21, signed and sealed by Wayne K. Helmila, P.E.

Carlos M. Utrera, P.E.
Product Control Examiner
NOA No. 24-0516.03
Expiration Date: August 30, 2028
Approval Date: July 18, 2024

DRAWING INDEX

TESTS PREFORMED:
TAS-100 (A) WIND DRIVEN RAIN RESISTANCE
TAS-201 LARGE MISSILE IMPACT
TAS-202 UNIFORM STATIC AIR PRESSURE TEST
TAS-203 CYCLIC WIND PRESUSRE TEST
DESIGN PRESSURE RATING 150 PSF

NOTES:

1. THE 1675WDVM HAS BEEN TESTED IN ACCORDANCE WITH THE MIAMI-DADE COUNTY PROTOCALS: TAS-100 A, TAS-201, TAS-202, & TAS-203 FOR WIND DRIVEN RAIN, LARGE MISSILE IMPACE, UNIFORM PRESSURE, AND CYCLIC WIND PRESSURE.
2. THIS LOUVER SYSTEM IS APPROVED FOR APPLICATIONS WITH DESIGN PRESSURES OF +/- 150 PSF OR LESS.
3. THIS LOUVER SYSTEM IS NON-BEARING AND IS NOT DESIGNED TO WITHSTAND BUILDING DEAD LOADS.
4. LOUVER ANCHORS ARE REVIEWED FOR ATTACHMENT INTO STEEL, CONCRETE, MASONRY, OR TIMBER STRUCTURE. MINIMUM EDGE DISTANCE AND EMBEDMENT REQUIREMENTS ARE SHOWN. NAILOR IND. DOES NOT DETERMINE THE STRUCTURE INTERGRITY OF THE SUBSTRUCTURE.
5. MAXIMUM SINGLE SECTION SIZE: 48" WIDE X 120" HIGH OR 120" WIDE X 48" HIGH.
6. MAXIMUM ASSEMBLED LOUVER SIZE UNLIMITED WIDE X 120" HIGH MAX. MULLION SPACING IS 48".
7. SECTIONS OR ASSEMBLIES MAY BE STACKED VERTICALLY PROVIDED A SUITIBLE STRUCTURE STRUCTURAL SUPPORT IS DESIGNED AND INSTALLED BY OTHERS TO SUPPORT ALL LOADS TRANSFERRED FOR THE LOUVER.

PRODUCT REVISED
as complying with the Florida Building Code
NOA-No. 24-0516.03
Expiration Date 08/30/2028
By
Miami-Dade Product Control

REVISIONS:
REV C: ADDED PAGE 5 AND RENUMBERED PAGES 6-12
- ADDED PAGE 5 SKINNY WALL APPLICATION HEAD AND SILL DETAIL CONT.
- UPDATED ALL PAGES.

N:\Drawing\LOUVERS\AMCA\1675WDVM\1675WDVM.dft

DWN BY: fcortinas
DATE: 9/25/2017
CHK BY: MAstourian
SCALE: NTS
SHEET: 1 OF 12
REV C
DWG. NO. 1675WDVM

Nailor Industries Inc.
4714 Winfield Road Houston, TX 77039
TEL: 281-590-1172 FAX: 281-590-3086
www.nailor.com

TITLE: 1675WDVM LOUVER
INDEX

WAYNE K. HELMILA
LICENSE
No. 59092
STATE OF FLORIDA
PROFESSIONAL ENGINEER

06/21/2024
COA: 9090

RICE
ENGINEERING
105 School Creek Trail
Luxemburg, WI 54217
Phone: (920) 617-1042
Fax: (920) 617-1100
www.rice-inc.com

Florida Firm No: F-01000005061
Certificate of Authorization: #9090
Wayne K. Helmila
Registration No: 59092

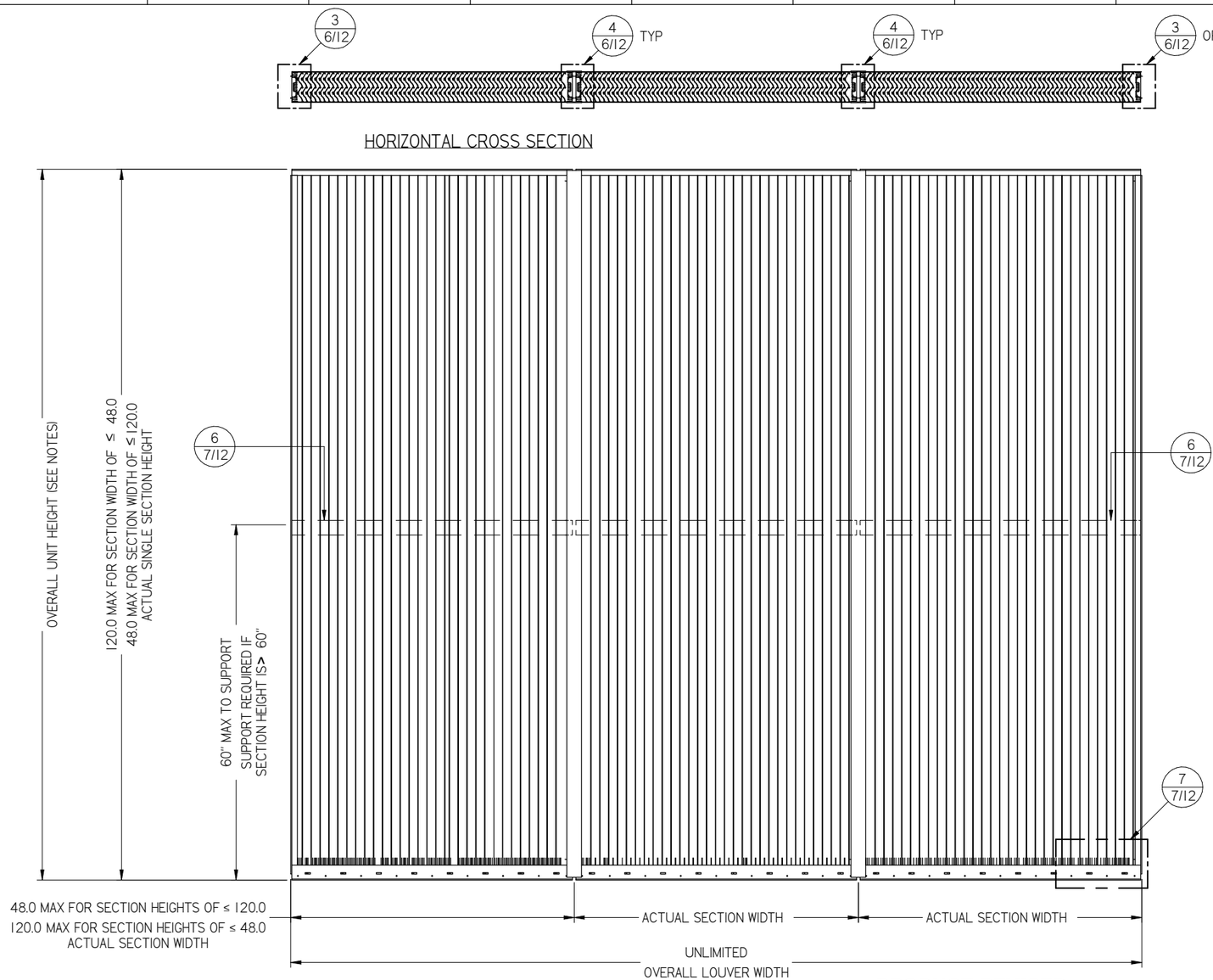

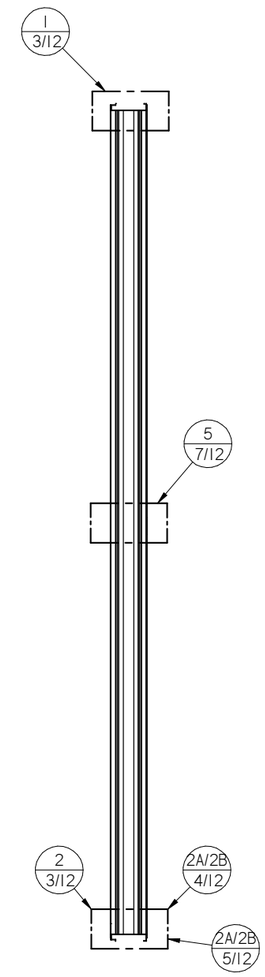

PRODUCT REVISED
as complying with the Florida Building Code
NOA-No. 24-0516.03
Expiration Date 08/30/2028
By
Miami-Dade Product Control

N:\Drawing\LOUVERS\AMCA\1675WDVM\1675WDVM.dft

REV. C - UPDATED SHEET TO ACCOUNT FOR PAGE 12

DWN BY: fcortinas
DATE: 9/25/2017
CHK BY: MAstourian
SCALE: NTS
SHEET: 2 OF 12
REV C
DWG. NO. 1675WDVM

Nailor Industries Inc.
4714 Winfield Road Houston, TX 77039
TEL: 281-590-1172 FAX: 281-590-3086
www.nailor.com

TITLE: 1675WDVM LOUVER
ELEVATION

WAYNE K. HELMILA
LICENSE
No. 59092
STATE OF
FLORIDA
PROFESSIONAL ENGINEER

06/21/2024
COA: 9090

RICE
ENGINEERING
105 School Creek Trail
Luxemburg, WI 54217
Phone: (920) 617-1042
Fax: (920) 617-1100
www.rice-inc.com
Florida Firm No: F-01000005061
Certificate of Authorization: #9090
Wayne K. Helmila
Registration No: 59092

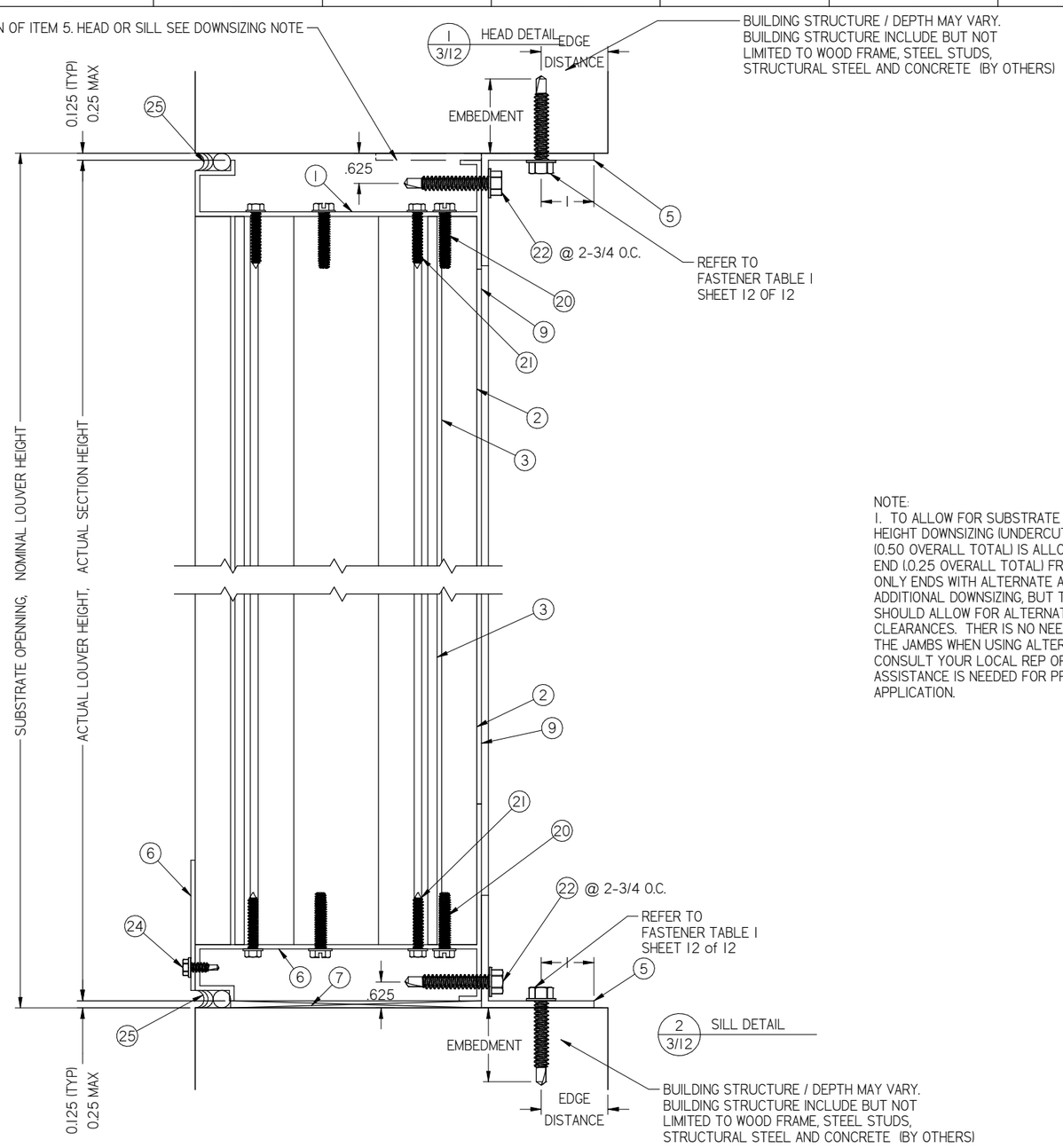

NOTE:
1. TO ALLOW FOR SUBSTRATE ANCHOR HEAD CLEARANCE, LOUVER HEIGHT DOWNSIZING (UNDERCUT) OF UP TO 0.25 TOTAL PER END (0.50 OVERALL TOTAL) IS ALLOWABLE. DOWNSIZING OF 0.125 PER END (0.25 OVERALL TOTAL) FROM ACTUAL HEIGHT IS STANDARD. ONLY ENDS WITH ALTERNATE ANCHOR ORIENTATION MAY REQUIRE ADDITIONAL DOWNSIZING, BUT THE 0.125 STANDARD DOWNSIZING SHOULD ALLOW FOR ALTERNATE ANCHOR ORIENTATION SETUP CLEARANCES. THER IS NO NEED FOR ADDITIONAL DOWNSIZING AT THE JAMBS WHEN USING ALTERNATE ONCHOR ORIENTAION. CONSULT YOUR LOCAL REP OR THE MANUFACTURER IF ASSISTANCE IS NEEDED FOR PROPER DOWNSIZING FOR YOUR APPLICATION.

PRODUCT REVISED
as complying with the Florida Building Code
NOA-No. 24-0516.03
Expiration Date 08/30/2028
By
Miami-Dade Product Control

REV. C - UPDATED FASTENER NOTE TO REFLECT CHANGES TO FASTENER TABLES.

N:\Drawing\LOUVERS\AMCA\1675WDVM\1675WDVM.dft

DWN BY: fcortinas
DATE: 9/25/2017
CHK BY: MAstourian
SCALE: NTS
SHEET: 3 OF 12
REV C
DWG. NO. 1675WDVM

Nailor Industries Inc.
4714 Winfield Road Houston, TX 77039
TEL: 281-590-1172 FAX: 281-590-3086
www.nailor.com

TITLE: 1675WDVM LOUVER HEAD AND SILL DETAIL

WAYNE K. HELMILA
LICENSE
No. 59092
STATE OF FLORIDA
PROFESSIONAL ENGINEER

06/21/2024
COA: 9090

RICE ENGINEERING
105 School Creek Trail
Luxemburg, WI 54217
Phone: (920) 617-1042
Fax: (920) 617-1100
www.rice-inc.com
Florida Firm No: F-01000005061
Certificate of Authorization: #9090
Wayne K. Helmila
Registration No: 59092

GROUT FILLED CMU
(BY OTHERS)

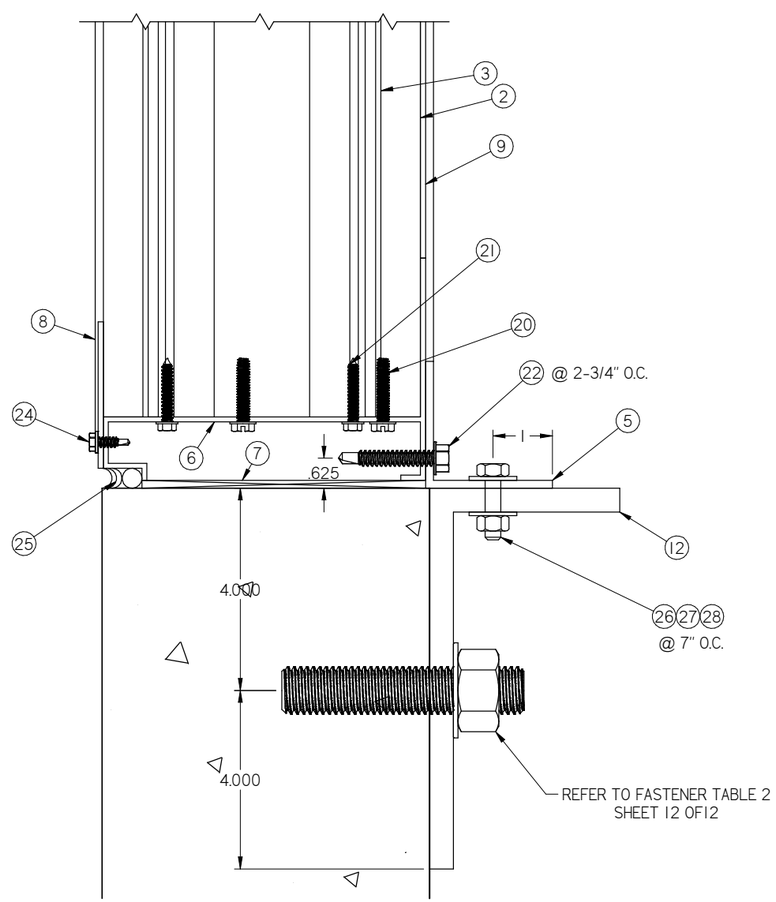

2A 4/12 SILL DETAIL SKINNY WALL

WOOD / STEEL 16G.A.
STEEL A-36 / CONCRETE
(BY OTHERS)

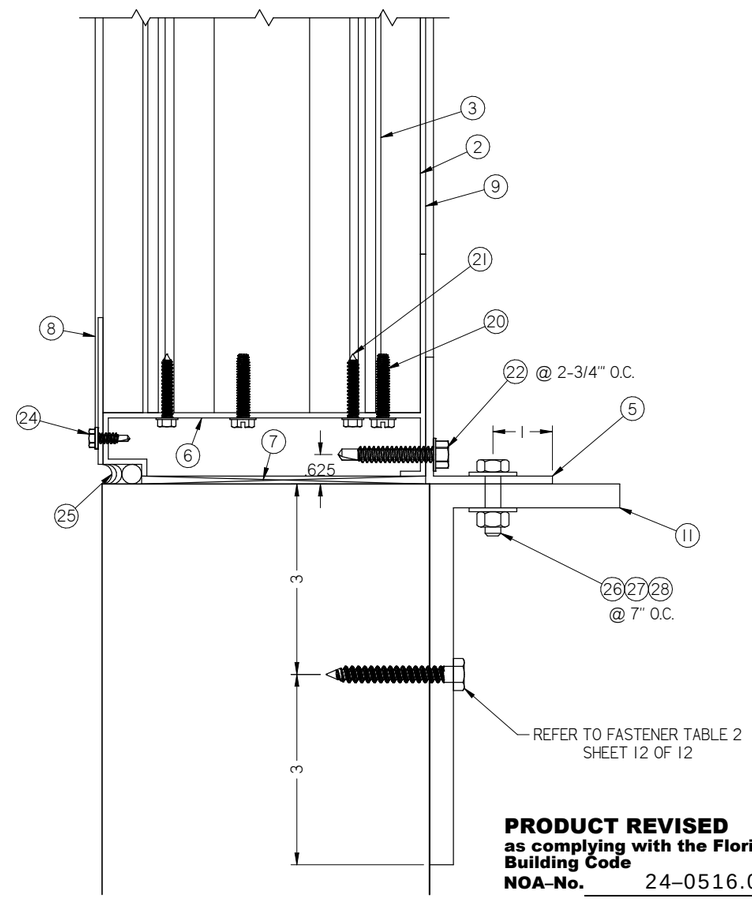

2B 4/12 SILL DETAIL SKINNY WALL

PRODUCT REVISED
as complying with the Florida Building Code
NOA-No. 24-0516.03
Expiration Date 08/30/2028
By
Miami-Dade Product Control

REV. C - UPDATED FASTENER NOTE TO REFLECT CHANGES TO FASTENER TABLES - CMU DETAIL UPDATED PER CALCULATIONS.

N:\Drawing\LOUVERS\AMCA\1675WDVM\1675WDVM.dft

DWN BY: fcortinas
CHK BY: MAstourian
DATE: 9/25/2017
SCALE: NTS
SHEET: 4 OF 12
REV C
DWG. NO. 1675WDVM

Nailor Industries Inc.
4714 Winfield Road Houston, TX 77039
TEL: 281-590-1172 FAX: 281-590-3086
www.nailor.com

TITLE:
1675WDVM LOUVER
SKINNY WALL APPLICATION
HEAD AND SILL DETAIL

WAYNE K. HELMILA
LICENSE
No. 59092
STATE OF FLORIDA
PROFESSIONAL ENGINEER

06/21/2024
COA: 9090

RICE
ENGINEERING
105 School Creek Trail
Luxemburg, WI 54217
Phone: (920) 617-1042
Fax: (920) 617-1100
www.rice-inc.com
Florida Firm No: F-01000005061
Certificate of Authorization: #9090
Wayne K. Helmila
Registration No: 59092

GROUT FILLED CMU
(BY OTHERS)

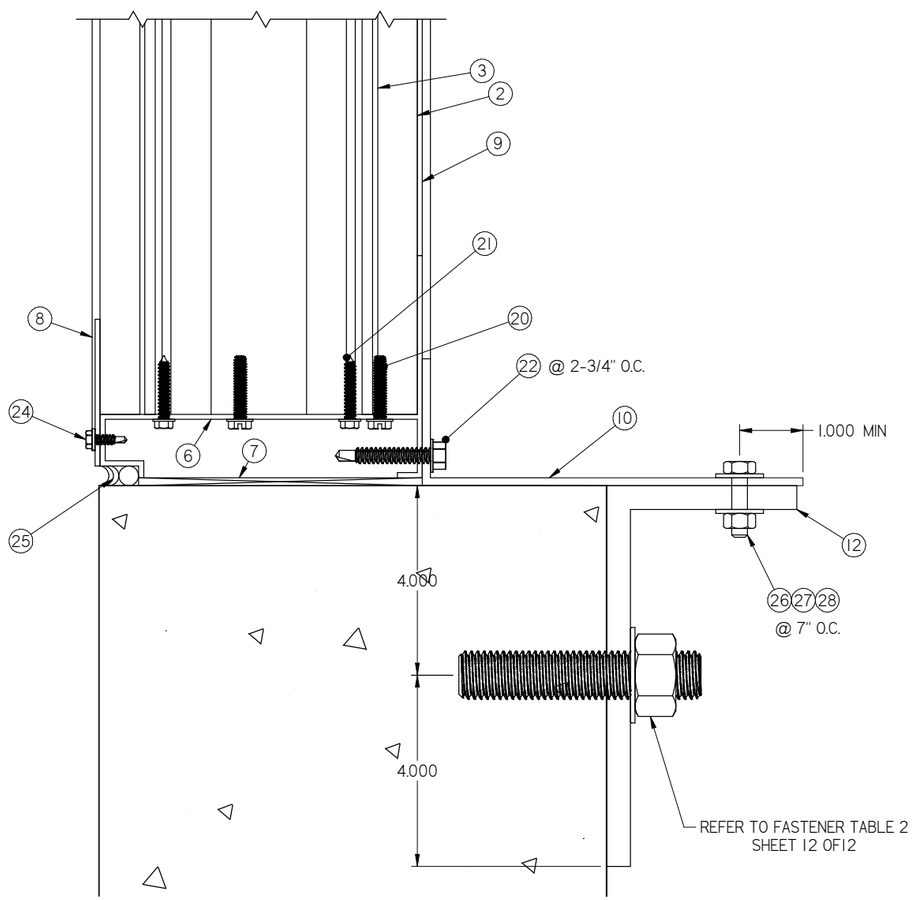

2A 5/12 SILL DETAIL SKINNY WALL

WOOD / STEEL 16G.A.
STEEL A-36 / CONCRETE
(BY OTHERS)

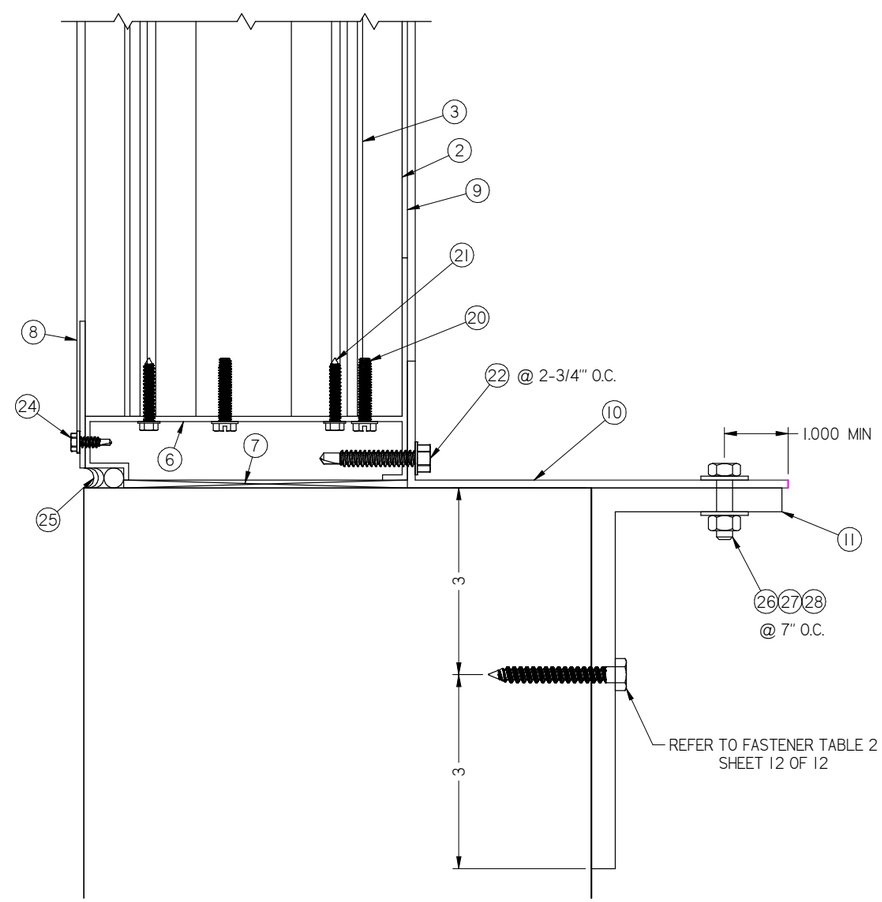

2B 5/12 SILL DETAIL SKINNY WALL

PRODUCT REVISED
as complying with the Florida Building Code
NOA-No. 24-0516.03
Expiration Date 08/30/2028
By
Miami-Dade Product Control

REV. C - ADDED PAGE TO SHOW ALTERNATE INSTALLATION FOR THICKER SUBSTRATES.

N:\Drawing\LOUVERS\AMCA\1675WDVM\1675WDVM.dft

DWN BY: fcortinas | CHK BY: MAstourian
DATE: 9/25/2017 | SCALE: NTS
SHEET: 5 OF 12
DWG. NO. 1675WDVM REV C

Nailor Industries Inc.
4714 Winfield Road Houston, TX 77039
TEL: 281-590-1172 FAX: 281-590-3086
www.nailor.com

TITLE: 1675WDVM LOUVER SKINNY WALL APPLICATION HEAD AND SILL DETAIL CONT.

WAYNE K. HELMILA
LICENSE
No. 59092
STATE OF FLORIDA
PROFESSIONAL ENGINEER

06/21/2024
COA: 9090

RICE
ENGINEERING
105 School Creek Trail
Luxemburg, WI 54217
Phone: (920) 617-1042
Fax: (920) 617-1100
www.rice-inc.com
Florida Firm No: F-01000005061
Certificate of Authorization: #9090
Wayne K. Helmila
Registration No: 59092

PRODUCT REVISED
as complying with the Florida Building Code
NOA–No. 24–0516.03
Expiration Date 08/30/2028
By
Miami–Dade Product Control

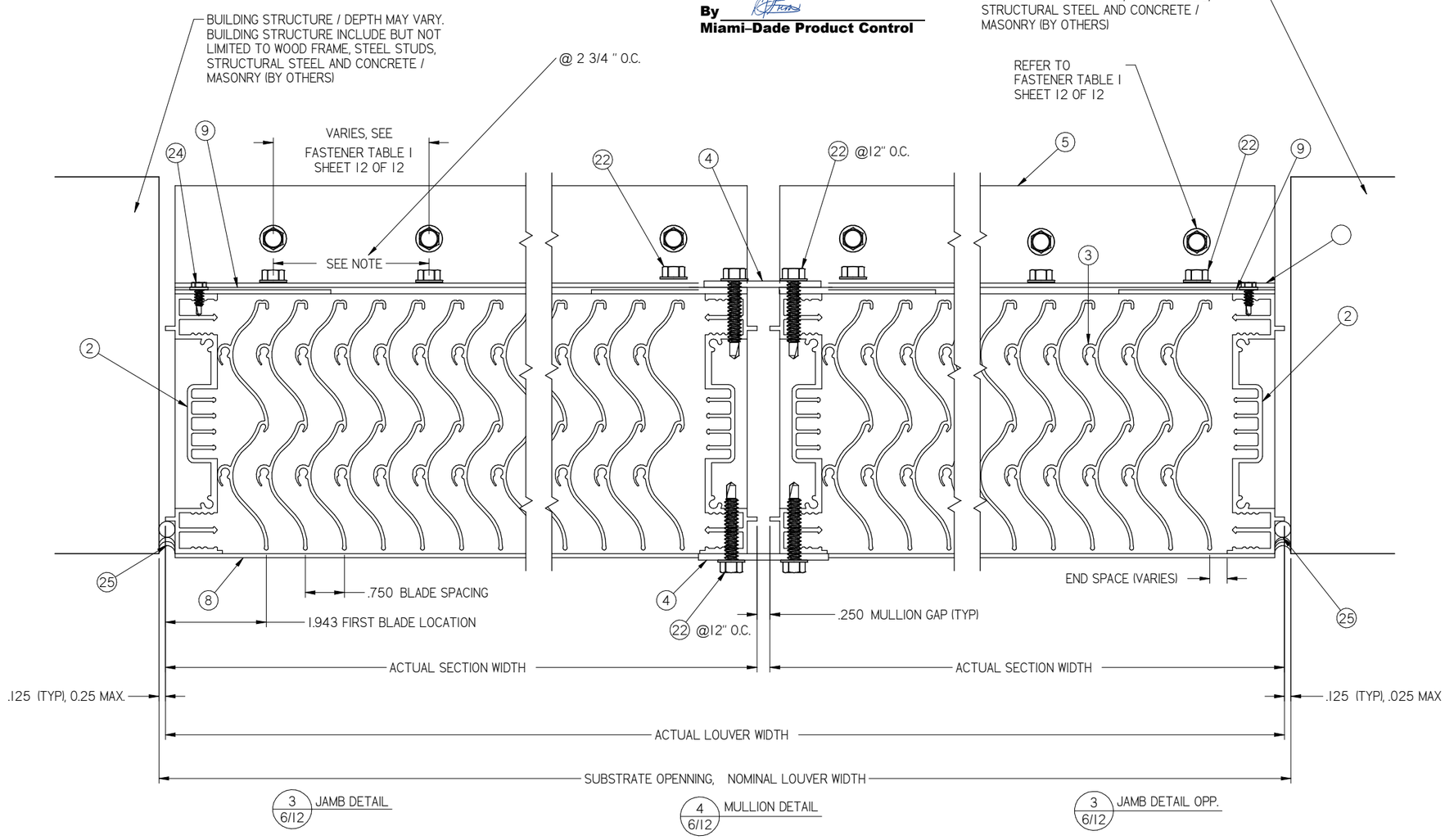

REV C: ADDED NOTE FOR ANGLE INSTALLATION O.C.
- UPDATED PAGE NUMBER

N:\Drawing\LOUVERS\AMCA\1675WDVM\1675WDVM.dft

DWN BY: fcortinas
CHK BY: MAstourian
DATE: 9/25/2017
SCALE: NTS
SHEET: 6 OF 12
REV C
DWG. NO. 1675WDVM

Nailor Industries Inc.
4714 Winfield Road Houston, TX 77039
TEL: 281-590-1172 FAX: 281-590-3086
www.nailor.com

TITLE: 1675WDVM LOUVER
JAMB AND MULLION DETAIL

WAYNE K. HELMILA
LICENSE
No. 59092
STATE OF FLORIDA
PROFESSIONAL ENGINEER

06/21/2024
COA: 9090

RICE
ENGINEERING
105 School Creek Trail
Luxemburg, WI 54217
Phone: (920) 617-1042
Fax: (920) 617-1100
www.rice-inc.com
Florida Firm No: F-01000005061
Certificate of Authorization: #9090
Wayne K. Helmila
Registration No: 59092

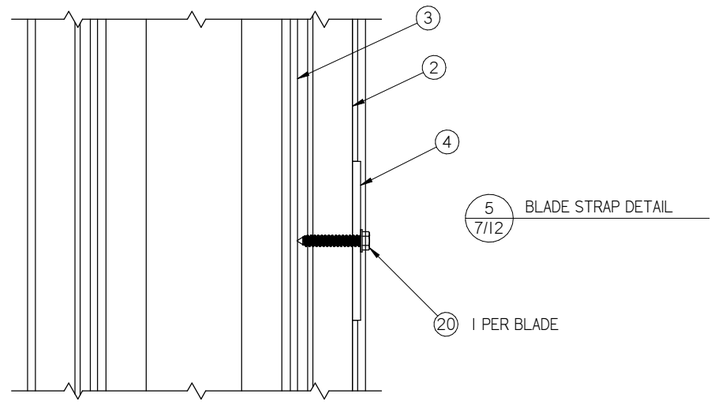

5 / 7/12 BLADE STRAP DETAIL

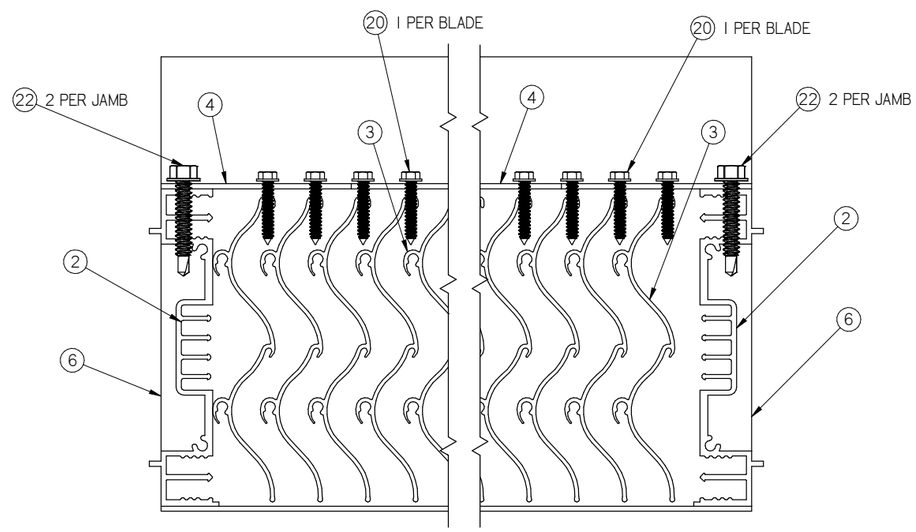

6 / 7/12 BLADE STRAP AT JAMB DETAIL

6 / 7/12 BLADE STRAP AT JAMB DETAIL OPP.

PRODUCT REVISED
as complying with the Florida Building Code
NOA-No. 24-0516.03
Expiration Date 08/30/2028
By
Miami-Dade Product Control

REV. C - UPDATED PAGE NUMBER

N:\Drawing\LOUVERS\AMCA\1675WDVM\1675WDVM.dft

DWN BY: fcortinas
DATE: 9/25/2017
CHK BY: MAstourian
SCALE: NTS
SHEET: 7 OF 12
REV C
DWG. NO. 1675WDVM

Nailor Industries Inc.
4714 Winfield Road Houston, TX 77039
TEL: 281-590-1172 FAX: 281-590-3086
www.nailor.com

TITLE: 1675WDVM LOUVER
BLADE STRAP DETAIL

WAYNE K. HELMILA
LICENSE
No. 59092
STATE OF FLORIDA
PROFESSIONAL ENGINEER

06/21/2024
COA: 9090

RICE
ENGINEERING
105 School Creek Trail
Luxemburg, WI 54217
Phone: (920) 617-1042
Fax: (920) 617-1100
www.rice-inc.com

Florida Firm No: F-01000005061
Certificate of Authorization: #9090
Wayne K. Helmila
Registration No: 59092

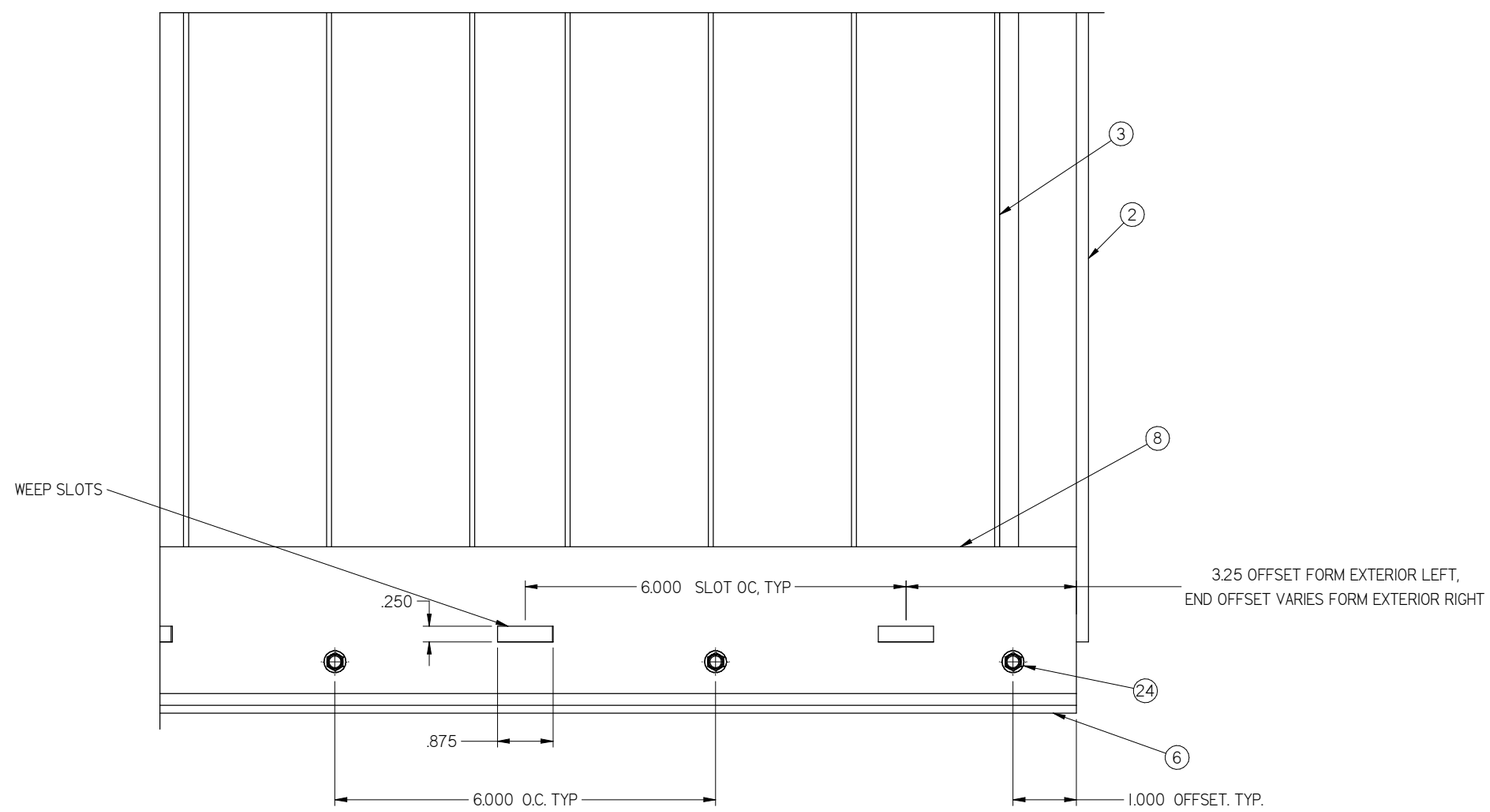

7 / 8/12 BAFFLE/ WEEP DETAIL

PRODUCT REVISED
as complying with the Florida Building Code
NOA–No. 24–0516.03
Expiration Date 08/30/2028
By
Miami–Dade Product Control

REV. C: UPDATED PAGE NUMBERS
- ADDED SCREWS AND BAFFLE

N:\Drawing\LOUVERS\AMCA\1675WDVM\1675WDVM.dft

DWN BY: fcortinas | CHK BY: MAstourian
DATE: 9/25/2017 | SCALE: NTS

SHEET: 8 OF 12

DWG. NO. 1675WDVM REV C

Nailor Industries Inc.
4714 Winfield Road Houston, TX 77039
TEL: 281-590-1172 FAX: 281-590-3086
www.nailor.com

TITLE: 1675WDVM LOUVER
BAFFLE / WEEP DETAIL

WAYNE K. HELMILA
LICENSE
No. 59092
STATE OF FLORIDA
PROFESSIONAL ENGINEER

06/21/2024
COA: 9090

RICE
ENGINEERING
105 School Creek Trail
Luxemburg, WI 54217
Phone: (920) 617-1042
Fax: (920) 617-1100
www.rice-inc.com

Florida Firm No: F-01000005061
Certificate of Authorization: #9090
Wayne K. Helmila
Registration No: 59092

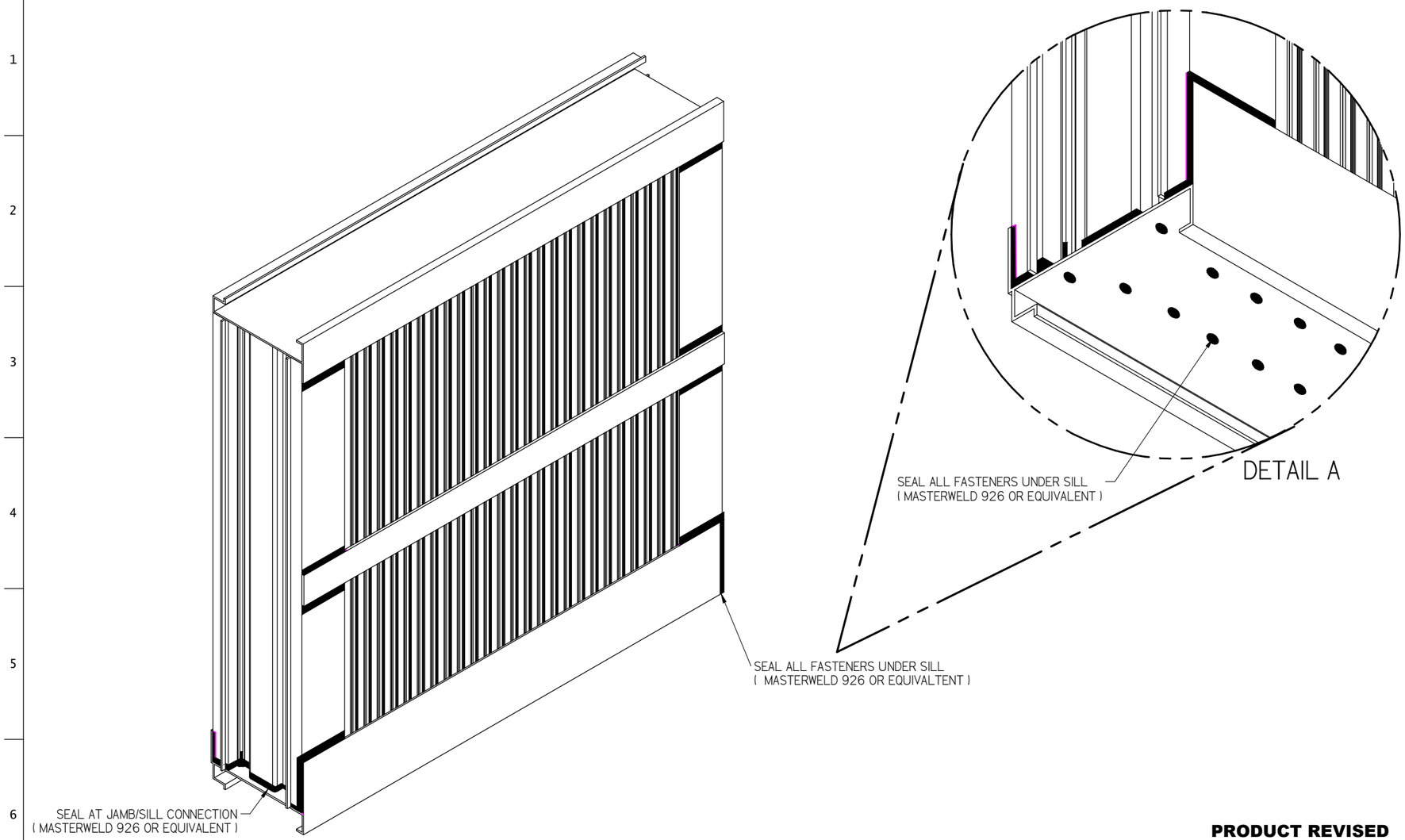

PRODUCT REVISED
as complying with the Florida Building Code
NOA-No. 24-0516.03
Expiration Date 08/30/2028
By
Miami-Dade Product Control

N:\Drawing\LOUVERS\AMCA\1675WDVM\1675WDVM.dft

REV. C: UPDATED PAGE NUMBERS

DWN BY: fcortinas
CHK BY: MAstourian
DATE: 9/25/2017
SCALE: NTS

SHEET: 9 OF 12

REV C

DWG. NO. 1675WDVM

Nailor Industries Inc.
4714 Winfield Road Houston, TX 77039
TEL: 281-590-1172 FAX: 281-590-3086
www.nailor.com

TITLE: 1675WDVM LOUVER
SEALANT DETAIL

WAYNE K. HELMILA
LICENSE
No. 59092
STATE OF FLORIDA
PROFESSIONAL ENGINEER

06/21/2024
COA: 9090

RICE
ENGINEERING
105 School Creek Trail
Luxemburg, WI 54217
Phone: (920) 617-1042
Fax: (920) 617-1100
www.rice-inc.com

Florida Firm No: F-01000005061
Certificate of Authorization: #9090
Wayne K. Helmila
Registration No: 59092

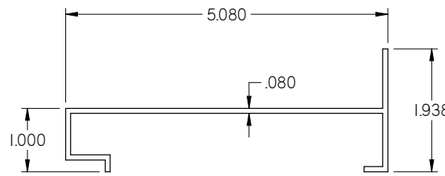

C6-119 HEAD / SILL FRAME
6063-T6 ALUM.
(1)

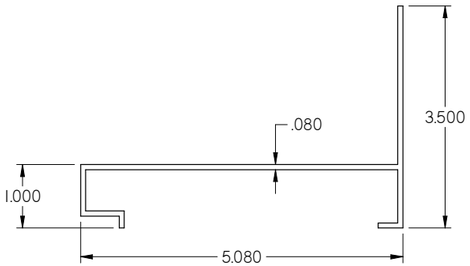

C6-240 SILL FRAME
6063-T6 ALUM.
(6)

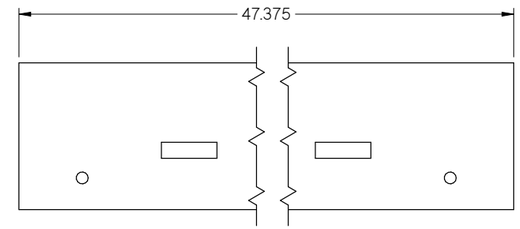

BAFFLE
5052-H53 ALUM.
(8)

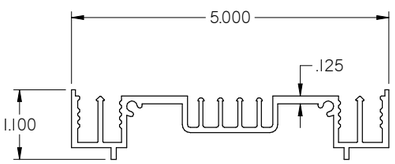

C6-241 JAMB FRAME
6063-T6 ALUM.
(2)

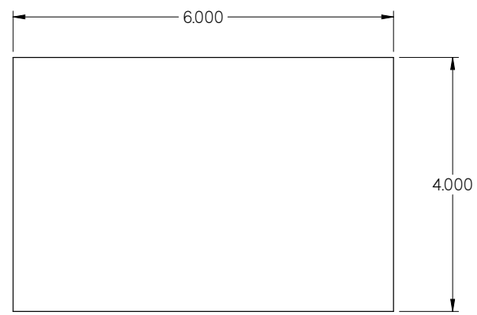

ALUMINUM SUPPORT SHIM
5052-H32 ALUM.
(7)

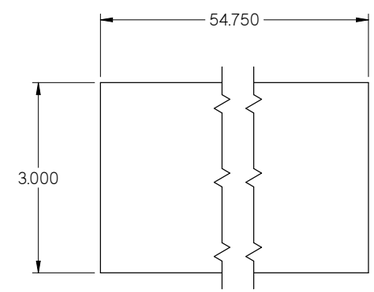

JAMB STOP
5052-H53 ALUM.
(9)

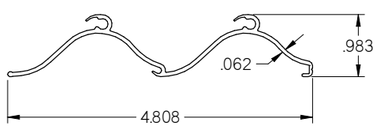

C6-204 BLADE
6063-T6 ALUM.
(3)

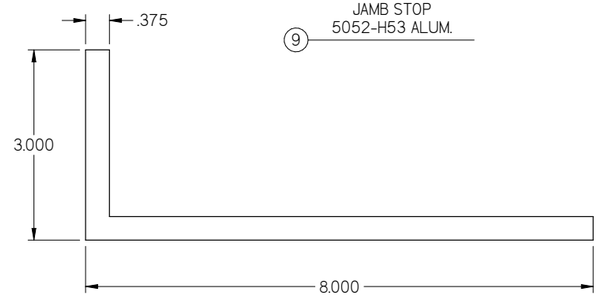

3 X 8 X 3/8 (CONT.)
6061-T6 ALUM ANGLE
(12)

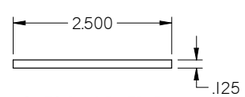

C6-179 BLADE STRAP
& MULLION BAR
6063-T6 ALUM.
(4)

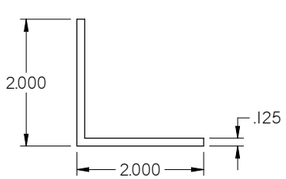

C6-160 2 X 2 X 1/8 (CONT.)
6063-T6 ALUM ANGLE
(5)

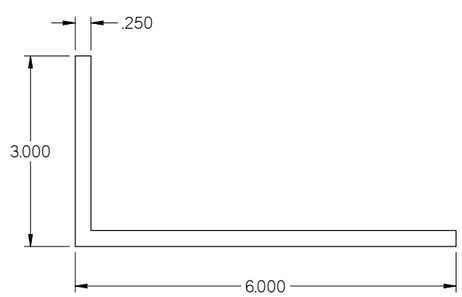

6 X 3 X 1/4 (CONT.)
6061-T6 ALUM ANGLE
(10)

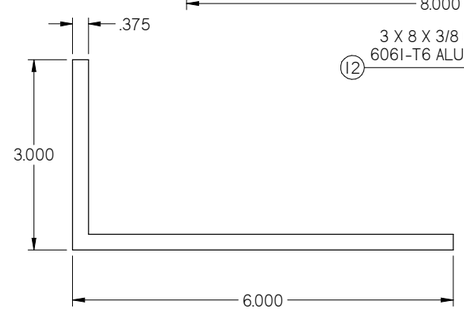

6 X 3 X 3/8 (CONT.)
6061-T6 ALUM ANGLE
(10)

PRODUCT REVISED
as complying with the Florida Building Code
NOA-No. 24-0516.03
Expiration Date 08/30/2028
By
Miami-Dade Product Control

REV. C - UPDATED PAGE NUMBER
- UPDATED SILL , JAMB
- ADDED BAFFLE, 3 X 8 X 3/8 ANGLE
- ADDED 6 X 3 X 1/4 ANGLE
- ADDED JAMB STOPS

N:\Drawing\LOUVERS\AMCA\1675WDVM\1675WDVM.dft

DWN BY: fcortinas
DATE: 9/25/2017
CHK BY: MAstourian
SCALE: NTS
SHEET: 10 OF 12
REV C
DWG. NO. 1675WDVM

Nailor Industries Inc.
4714 Winfield Road Houston, TX 77039
TEL: 281-590-1172 FAX: 281-590-3086
www.nailor.com

TITLE: 1675WDVM LOUVER
PART PROFILES

WAYNE K. HELMILA
LICENSE
No. 59092
STATE OF FLORIDA
PROFESSIONAL ENGINEER

06/21/2024
COA: 9090

RICE
ENGINEERING
105 School Creek Trail
Luxemburg, WI 54217
Phone: (920) 617-1042
Fax: (920) 617-1100
www.rice-inc.com
Florida Firm No: F-01000005061
Certificate of Authorization: #9090
Wayne K. Helmila
Registration No: 59092

BILL OF MATERIAL

ITEM	INTERNAL ID	DESCRIPTION	MATERIAL	NOTES
1	C6-119	HEAD / SILL FRAME	6063-T6	ONLY AT HEAD
2	C6-241	JAMB FRAME	6063-T6	
3	C6-204	BLADE	6063-T6	.75" CENTERS/SPACING
4	C6-179	BLADE STRAP / MULLION BAR	6063-T6	REQUIRED IF SECTION HEIGHT IS 60.00" OR GREATER
5	C6-160	2 X 2 X 1/8 ANGLE (CONT.)	6063-T6	AT HEAD AND SILL ONLY
6	C6-240	SILL	6063-T6	ONLY AT SILL
7	-	ALUMINIUM SUPPORT SHIM	5052-H32	BY OTHERS , OPTIONAL, AS NEEDED (1/4" THICK MAX.)
8	-	BAFFLE	5052-H32	FRONT DRAIN
9	-	JAMB STOP	5052-H32	SIZE VARIES AS NEEDED
10	-	6 X3 X 1/4 ANGLE (CONT.)	6061-T6	USED IN SKINNY WALL APPLICATION
11	-	6 X3 X 3/8 ANGLE (CONT.)	6061-T6	USED IN SKINNY WALL APPLICATION
12	-	3 X 8 X 3/8 ANGLE (CONT)	6061-T6	USED IN SKINNY WALL APPLICATION
--				
20	C6-189	SCREW,MACHINE , HW, #10-24 X 1 1/2, ZP	300 SERIES, SS COND CW	2 @ BLADE ENDS, AND BLADE STRAP ONE PER BLADE
21	C6-192	SCREW, MACHINE, MTL, HEX, #10 X 1 1/2, 410SS	300 SERIES, SS COND CW	2 @ FRAME CORNERS
22	C6-193	SCREWM METAL, HEX, #14 X 1 1/2, 410SS	300 SERIES, SS COND CW	@ HEAD AND SILL@ 2-3/4" O.C., AND @ BLADE STRAP 2 PER JAMBS
24	C6-198	SCREW, MTL, HEX, #8 X 3/4, 410SS	300 SERIES, SS COND CW	
25	-	SEALANT & BACKER ROD	VARIOUS	BY OTHERS
26	C6-181	1/4 NYLON INSERT LOCKNUT	STAINLESS	
27	C6-186	1/4 COMM"L FLAT WASHER	STAINLESS	
28	C6-187	1/4-20 X 1 HEX CAP SCREW 18-8 SS	STAINLESS	

GENERAL NOTES:

1. DUE TO PASSING TAS-100A, THE LOUVER IS DESIGNED TO PREVENT WIND DRIVEN RAIN FROM PENETRATING THE SPACE BEHIND THE LOUVER. AS SUCH, THE LOUVER MAY BE INSTALLED IN A LOCATION WHERE THE SPACE/ROOM BEHIND THE LOUVER IS NOT DESIGNED TO DRAIN WATER PENETRATING INTO THE ROOM OR THE ROOM WILL HOUSE NON-WATER RESISTANT/ PROOF EQUIPMENT, COMPONENTS, OR SUPPLIES.
2. INSTALLER TO PROVIDE SEPARATION OF DISSIMILAR MATERIALS AS REQUIRED. ALUMINUM DESIGN MANUAL (CHAPTER F) FOR DETAILS.
3. ALL ALUMINIUM, STAINLESS STEEL (SS), AND PLATED / COATED STEEL PARTS PROVIDED BY MANUFACTURER ARE INHERENTLY CORROSION RESISTANT OR HAVE A CORROSION RESISTANT COATING.
4. STEEL / STAINLESS, STEEL / ALUMINIUM PARTS MAY BE MADE OUT OF ALTERNATE ALLOY THAT HAS EQUAL OR GREATER YIELD STRENGTH. PART DIMENSIONS ARE MINIMUMS UNLESS DEFINED OTHER WISE.
5. THE INTERNAL ID# SHOWN ON PAGE 9 IS FOR FACTORY USE AND TRACKING PURPOSES ONLY AND MAY BE UPDATED AT ANY TIME. ANY UPDATES WILL NOT ALTER THE ITEM AS DESCRIBED HEREIN.

PRODUCT REVISED
as complying with the Florida Building Code
NOA-No. 24-0516.03
Expiration Date 08/30/2028
By
Miami-Dade Product Control

REV. C - UPDATED PAGE NO.
ADDED ITEM #8 - BAFFLE
ADDED ITEM # 9 - JAMB STOP
ADDED ITEM # 10 - 3 X 6 X 1/4 ANGLE (CONT.)
ADDED ITEM # 11 - 3 X 6 X 3/8 ANGLE (CONT.)
ADDED ITEM # 12 - 8 X 3 X 3/8 ANGLE (CONT.)

N:\Drawing\LOUVERS\AMCA\1675WDVM\1675WDVM.dft

DWN BY: fcortinas
CHK BY: MAstourian
DATE: 9/25/2017
SCALE: NTS
SHEET: 11 OF 12
REV C
DWG. NO. 1675WDVM

Nailor Industries Inc.
4714 Winfield Road Houston, TX 77039
TEL: 281-590-1172 FAX: 281-590-3086
www.nailor.com

TITLE: 1675WDVM LOUVER BILL OF MATERIAL GENERAL NOTES

WAYNE K. HELMILA
LICENSE
No. 59092
STATE OF FLORIDA
PROFESSIONAL ENGINEER

06/21/2024
COA: 9090

RICE ENGINEERING
105 School Creek Trail
Luxemburg, WI 54217
Phone: (920) 617-1042
Fax: (920) 617-1100
www.rice-inc.com
Florida Firm No: F-01000005061
Certificate of Authorization: #9090
Wayne K. Helmila
Registration No: 59092

TABLE 1: HEAD & SILL ANCHORS													
Wood	Steel Stud	Steel	Concrete	CMU	Skinny Wall	Min.	Fastener Type	Diameter	# Rqd	O.C. Spacing	Edge	End	Embedment
X						SG 0.42	LAG BOLT (300 SERIES SS - COND. CW - Fy = 65 ksi)	1/4"	1	2-3/4"	2"		2-1/16
X						SG 0.42	LAG BOLT (300 SERIES SS - COND. CW - Fy = 65 ksi)	3/8"	1	3-3/4"	2"		2-1/16
	X					16 Ga.	Elco Bi-Flex Screws (300 Series SS, FY = 65 ksi)	1/4"	1	2-1/4"	2"		3 THREADS BEYOND SUBSTRATE
		X				A-36	Elco Bi-Flex Screws (300 Series SS, FY = 65 ksi)	1/4"	1	8"	2"		1/4"
		X				A-36	Elco Drill-Flex Drilling Screws (Cond. CW - Fy= 65ksi) Sealed w/ Liquid Prosoco	5/16"	1	10"	2"		1/4"
			X- Cracked 6" Deep			4 ksi	Hilti Kwik HUS-EZ SS 316	3/8	1	10"	4"	4"	2-1/2

TABLE 2: SKINNY WALL ANCHORS													
Wood	Steel Stud	Steel	Concrete	CMU	Skinny Wall	Min.	Fastener Type	Diameter	# Rqd	O.C. Spacing	Edge	End	Embedment
X					X	SG 0.42	LAG BOLT (300 SERIES SS - COND. CW - Fy = 65 ksi)	1/4"	1	3-1/4"	3"		2-3/16"
X					X	SG 0.42	LAG BOLT (300 SERIES SS - COND. CW - Fy = 65 ksi)	3/8"	1	4-1/4"	3"		2-3/16"
	X				X	16 Ga.	Elco Bi-Flex Drilling Screws (300 Series SS, FY = 65 ksi)	1/4"	1	1"	3"		3 THREADS BEYOND SUBSTRATE
		X			X	A-36	Elco Bi-Flex Drilling Screws (300 Series SS, FY = 65 ksi)	1/4"	1	6"	3"		1/4"
		X			X	A-36	Elco Drill-Flex Drilling Screws (Cond. CW - Fy= 65ksi) Sealed w/ Liquid Prosoco	5/16"	1	6-3/4"	3"		1/4"
			X- Cracked 6" Deep		X	4 ksi	HILTI KWIK BOLT TZ2 SS 304	3/8"	1	8"	3"	3"	2-1/2"
			X- Cracked 6" Deep		X	4 ksi	HILTI KWIK BOLT TZ2 SS 304	1/2"	1	10"	3"	3"	3"
				X-Grout Filled	X	2 ksi	HILTI HIT-Hy 270 Threaded Rod 316/304 SS	3/4"	1	8"	4"		6-3/4"

NOTE 1: CONRETE MASONRY (CMU) SHALL BE > THE FOLLOWING, 6" WIDE, CMU CONFORMINGTO ASTM C-90 FILLED WITH 4,747 KSI GROUT.

NOTE 2: CONRETE MASONRY (CMU) SHALL BE > THE FOLLOWING, 6" WIDE, GRADE N, TYPE II, LIGHT-WEIGHT / MEDIUM-WEIGHT / NORMAL-WEIGHT CMU CONFORMING TO ASTM C-90. MORTAR MUST BE TYPE N. CMU STRENGTH = 2000 psi

NOTE 3: CONCRETE, STEEL, WOOD, MASONRY, CURTAIN WALL, STOREFRONT, AND ALL OTHER BUILDING SUBSTRATES ARE DESIGNED BY OTHERS.

NOTE 4: ENGINEER OF RECORD TO VERIFY THAT BUILDING SUBSTRATE CAN SUPPORT THE LOUVER REACTIONS.

NOTE 5: THREAD PENETRATION LENGTH SIGNIFIES THE REQUIRED LENGTH OF THE THREADED PORTION OF THE FASTENER INTO THE WOOD SUBSTRATEPROVIDING FULL CONTACT WITH WOOD. LAG SCREW TIP CANNOT BE CONSIDERED PART OF THE TREADED PORTION FO THE SCREW. LAG SCREWS ARE NOT TO BE INSTALLED AT WOOD JOINTS / SPICES WHERE THE LAG SCREW COULD FALL BETWEEN MEMBERS.

NOTE 6: STEEL STUDS TO BE 16 G.A. FY= 33ksi MIN.

PRODUCT REVISED
as complying with the Florida Building Code
NOA-No. 24-0516.03
Expiration Date 08/30/2028
By
Miami-Dade Product Control

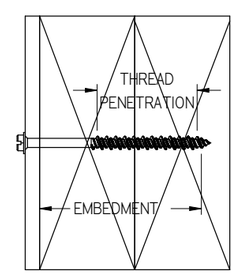

REVISIONS:
REV. C: UPDATED FASTENER SCHEDULE (2 TABLES)

N:\Drawing\LOUVERS\AMCA\1675WDVM\1675WDVM.dft

DWN BY: fcortinas
DATE: 9/25/2017
CHK BY: MAstourian
SCALE: NTS
SHEET: 12 OF 12
REV C
DWG. NO. 1675WDVM

Nailor Industries Inc.
4714 Winfield Road Houston, TX 77039
TEL: 281-590-1172 FAX: 281-590-3086
www.nailor.com

TITLE: 1675WDVM LOUVER
FASTENER SCHEDULE

WAYNE K. HELMILA
LICENSE
No. 59092
STATE OF FLORIDA
PROFESSIONAL ENGINEER

06/21/2024
COA: 9090

RICE
ENGINEERING
105 School Creek Trail
Luxemburg, WI 54217
Phone: (920) 617-1042
Fax: (920) 617-1100
www.rice-inc.com
Florida Firm No: F-01000005061
Certificate of Authorization: #9090
Wayne K. Helmila
Registration No: 59092