Engineered Comfort

SHIP SEPARATE / LOOSE RISER ASSEMBLY FOR VERTICAL HI-RISE FAN COIL UNITS MODEL SERIES: 39VH AND 39L MODELS: 39VHR2P AND 39LR2P (2-PIPE) 39VHR4P AND 39LR4P (4-PIPE)

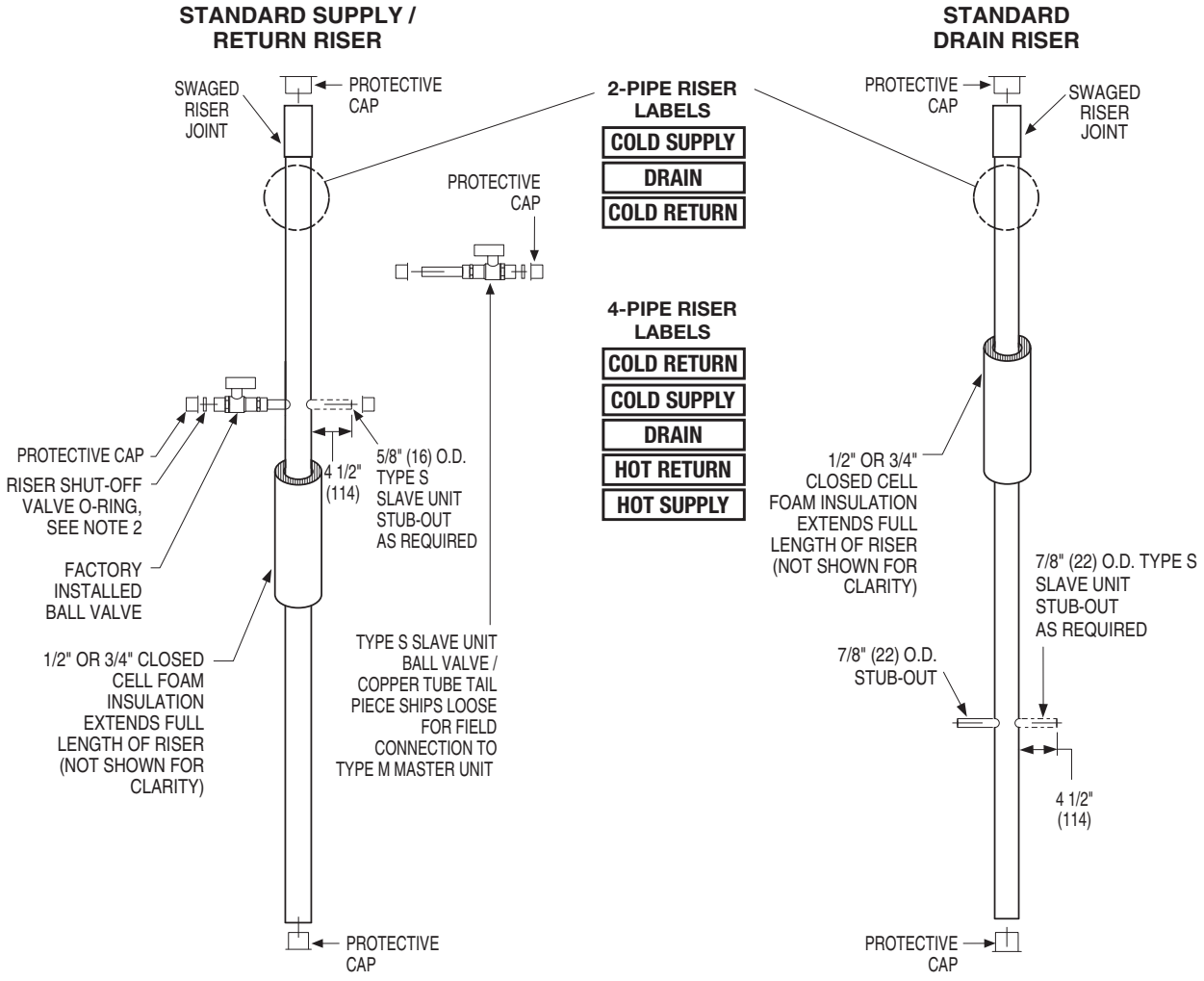

TAG INFORMATION LABEL EXAMPLE:

S.O. 123456/PO#789012
TAG: FCU-2-21-5

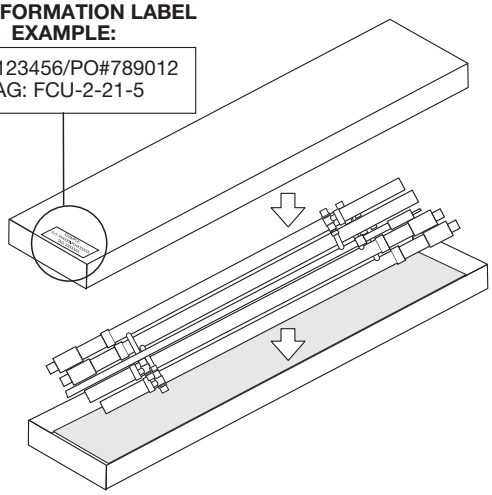

NOTES:

1. All risers and ball valves are shipped with protective caps. These caps should remain in place until installation of the unit.
2. Each ball valve is supplied with an O-ring that is bagged and shipped loose for field installation by others.
3. All risers are factory tested and guaranteed to be leak free at time of shipment.
4. Riser information shown shall reflect matching unit identification labels.
5. Refer to fan coil unit riser submittal for riser installation sequence order. Type S Slave units will have mirror image orientation and will be labeled in units.
6. Condensate P-trap and hose clamp ships installed in unit for field connection to drain riser.
7. Each set of "Ship loose" risers are packed and shipped in their own carton.
8. Riser length = Floor to Floor height + 2" (51). Extensions ship loose.
   39VH maximum riser length is 120" (3048)
   39L maximum riser length is .

SCHEDULE TYPE:	Dimensions are in inches (mm).			
PROJECT:				
ENGINEER:	**DATE**	**B SERIES**	**SUPERSEDES**	**DRAWING NO.**
CONTRACTOR:	**11 - 20 - 08**	**39**	**2 - 28 - 08**	**39VH/L-2**

Engineered Comfort reserves the right to change any information concerning product or pricing without notice.